ANCHOR
by Panasonic

WOODS

For those who turn class into a statement.

ANCHOR
by Panasonic

ANCHOR ELECTRICALS PVT. LTD.,
3rd Floor, B Wing I-Think Techno Campus, Pokharan Road No.2, Thane (W), Thane - 400 607.
T: (9122) 42228888 | F: (9122) 30418884/5/6/7
Customer Care Cell: 1800-103-8606 / Email: info@anchor-world.com
www.anchor-world.com

Dealers Stamp

ASIA'S MOST PROMISING BRANDS

*Superbrand 2017-18 awarded for Switches and Accessories

INDIA'S 70 MOST TRUSTED POWER BRANDS

Price List: April 2018

'Woods Showcase!

Sometimes being stylish is just not enough!
Contemporariness needs to match efficiency and
efficiency needs to exceed the requisite
levels of comfort.

Introducing… Woods Wiring Devices, for those
who believe in style with comfort! Woods is our premium
wiring devices range catering to the electrical requirements
of residences, commercial and hospitality
sector alike. These switches are designed keeping the
ever-changing essentials of these segments in the
electrical construction materials business.
Renowned for immaculate product design, superior finish,
and stellar technology; it offers unrivaled operational
comfort and safety. Like the add-ons in the finest coffee enrich
its flavors further, Woods Wiring Devices redefine your favorite
space with their fine gloss finish and add to the glamor
quotient of your household with their gray and
white accessories. Manufactured in our ISO certified facilities
at Daman and Haridwar the range adheres to the
stringent requirements of the BIS (Indian Standards).
Be it a home, a hotel, a store, foyer or mall,
Woods has a device that befits requirement of every space.
Experience the tour de force crafted for your favored
space with glamor and Switch on your own Style
Statement with Woods!

60013 60016 60019 60022 60025 60028 60031

60034 60037 60040 60043 60046

60058 60061 60064

60067 60070 60073

60085 60088

60100 60106 60109 60112 60018

60154 60157

60166 60172 / 61865 60175 60178 60181

CODE	DESCRIPTION	HSN CODE	MRP	PKD
	SWITCHES 10AX RATED, 240V ~, SP			
60013	10AX 1 Way Switch	8536	45/-	20
60016	10AX 2 Way Switch	8536	109/-	20
60019	10AX 1 Way Switch with indicator	8536	112/-	20
60022	10AX 1 Way Switch with Fan Mark	8536	106/-	20
60025	10AX 1 Way Switch with Light Mark	8536	106/-	20
60028	10A 10A Bell Push Switch	8536	110/-	20
60031	10A Bell Push Switch with Indicator	8536	124/-	20
60034	10AX 1 Way Switch Large	8536	114/-	10
60037	10AX 2 Way Switch Large	8536	128/-	10
60040	10AX 1 Way Switch with Indicator Large	8536	128/-	10
60043	10A Bell Push Switch Large	8536	124/-	10
60046	10A Bell Push Switch with Indicator Large	8536	143/-	10
	SWITCHES 20A RATED, 240V ~, SP			
60058	20A 1 Way Switch	8536	128/-	20
60061	20A 2 Way Switch	8536	143/-	20
60064	20A 1 Way Switch with indicator	8536	148/-	20
60067	20A 1 Way Switch Large	8536	148/-	10
60070	20A 2 Way Switch Large	8536	164/-	10
60073	20A 1 Way Switch with indicator Large	8536	172/-	10
	POWER SWITCHES, 240V ~			
60085	25A S.P. 1 Way Switch with Indicator	8536	188/-	20
60088	32A D.P. Main Switch with Indicator	8536	240/-	10
	SOCKETS 6A / 10A / 13A / 20A, 240V ~			
60100	6A 2 Pin URO Socket	8536	90/-	20
60106	6A Multi Socket for 2 and 3 pin plug	8536	124/-	10
60109	10A/20A Twin Socket (Tested Up to 25A)	8536	199/-	10
60112	6A/10A/13A Combi Socket for all types of Pins	8536	217/-	10
60018	6A 3 Pin Socket	8536	118/-	10
	MOTOR STARTER SWITCH SINGLE PHASE, 240V ~			
60154	20A Motor Starter Switch	8536	437/-	10
60157	25A Motor Starter Switch	8536	437/-	10
	FAN REGULATORS & DIMMERS, 240V ~, 50Hz			
60166	Fan Step Regulator Tiny EME 100W	8414	349/-	10
60172	Fan Step Regulator 100W	8414	469/-	10
61865	High Speed Fan Step Regulator 100W	8414	486/-	10
60175	Mini 450 W Dimmer	8543	305/-	10
60178	Dimmer 650 W (For Incandescent Lamp)	8543	415/-	10
60181	Dimmer 1000 W (For Incandescent Lamp)	8543	599/-	10

* 16A,20A,25A Switch not suggested for geyser load. Instead Motor Starter must be used.

60217 60220 60229 61859 61856 61862 (Suitable for Amps, KRONE, Systimax Jacks)

60265 60226 60232 CAT 5 60268 CAT 6 60241 60205

60208 60250 60244 60235 60271 60148 60256

60259 60223 60334 60253

For Outside The Room For Inside The Room Final Look Outside The Room

60637

60289

60202 Final Look Inside The Room

60298

CODE	DESCRIPTION	HSN CODE	MRP	PKD
	SUPPORT MODULE			
60217	Telephone Jack RJ11 Single with shutter	8536	103/-	20
60220	Telephone Jack RJ11 Double W/O shutter	8536	150/-	20
60229	Adaptor only for AT&T / Lucent AMPS Avaya Cat 5	8536	110 /-	10
61859	RJ45 computer socket Cat 6	8536	389 /-	10
61856	RJ45 computer socket Cat 5e	8536	341/-	10
61862	RJ 45 Receptor	8536	102/-	10
60265	Adaptor for AT&T/ Lucent Cat 6 with shutter	8536	113/-	10
60226	Computer / Modem Jack RJ45 with shutter	8536	192/-	10
60232	Computer / Modem Jack Cat 5 with shutter	8536	859/-	10
60268	Computer Jack Cat 6 for AT&T/ Lucent	8536	955/-	10
60241	Fuse Unit for 16A or 10A	8536	112/-	20
60205	Cord Outlet with Grip	8536	89/-	20
60208	TV Antena Outlet	8536	104/-	20
60250	Bell Indicator	8536	205/-	10
60244	Neon Indicator (Red)	8531	74/-	10
60235	Blank Plate Single	8538	23/-	20
60271	Buzzer	8531	132/-	10
60148	1000mA, 5VDC ,USB Charger,1M	8536	689/-	10
60256	PIR Sensor (Wall Mounting),12A,240V~,50Hz	8536	2356/-	4
60259	Compact Speaker 3 w. rms	8536	307/-	10
60223	Volume Controller	8536	144/-	10
60334	Indicator / Night Lamp with LED (Long Life)	8536	201/-	10
60253	Down Light / Foot Light (LED - White) with Variable Shutter Regulates Light Output (3 Module White Cool Day Light)	8512	388/-	10
	HOTEL & HOSPITALITY RANGE 240V~ (Unit 5 Nos) DND / MMR			
60637	Indicator marked DO NOT DISTURB, Indicator marked MAKE MY ROOM } Outside The Room; Bell Push + ; Switch marked DO NOT DISTURB, Switch marked MAKE MY ROOM } To Operate From Inside The Room	8536	893/-	5
	32A DOUBLE POLE MAIN SWITCH OPERATED BY KEY RING TAG 240V~			
60289	32A D.P. Switch Operate by key ring tag PC (With frame & front plate) 2 module (Complete Unit)	8536	473/-	5
	KEY CARD SWITCH, 240V~			
60202	20A 30 seconds time delay electronic key card unit (without frame & plate) 3 module (Supplied without Card)	8536	1343/-	5
	SHAVER SOCKET, 240V~			
60298	Shaver Socket with Transformer 110 / 240V (with mounting frame & front plate) 4 module	8536	1441/-	1

90013 90016 90019 90022 90025 90028 90031

90034 90037 90040 90043 90046

90058 90016 90064

90067 90070 90073

90085 90088

90100 90106 90109 90112 90018

90154 90157

90166 90172/91865 90175 90178 90181

CODE	DESCRIPTION	HSN CODE	MRP	PKD
	SWITCHES 10AX RATED, 240V ~, SP			
90013	10AX 1 Way Switch	8536	47/-	20
90016	10AX 2 Way Switch	8536	124/-	20
90019	10AX 1 Way Switch with indicator	8536	126/-	20
90022	10AX 1 Way Switch with Fan Mark	8536	121/-	20
90025	10AX 1 Way Switch with Light Mark	8536	121/-	20
90028	10A Bell Push Switch	8536	125/-	20
90031	10A Bell Push Switch with Indicator	8536	141/-	20
90034	10AX 1 Way Switch Large	8536	128/-	10
90037	10AX 2 Way Switch Large	8536	146/-	10
90040	10AX 1 Way Switch with Indicator Large	8536	146/-	10
90043	10A Bell Push Switch Large	8536	141/-	10
90046	10A Bell Push Switch with Indicator Large	8536	163/-	10
	SWITCHES 20A RATED, 240V ~, SP			
90058	20A 1 Way Switch	8536	147/-	20
90061	20A 2 Way Switch	8536	163/-	20
90064	20A 1 Way Switch with indicator	8536	169/-	20
90067	20A 1 Way Switch Large	8536	166/-	10
90070	20A 2 Way Switch Large	8536	185/-	10
90073	20A 1 Way Switch with indicator Large	8536	195/-	10
	POWER SWITCHES, 240V ~			
90085	25A S.P. 1 Way Switch with Indicator	8536	211/-	20
90088	32A D.P. Main Switch with Indicator	8536	273/-	10
	SOCKETS 6A / 10A / 13A / 20A, 240V ~			
90100	6A 2 Pin URO Socket	8536	101/-	20
90106	6A Multi Socket for 2 and 3 pin plug	8536	142/-	10
90109	10A/20A Twin Socket (Tested Up to 25A)	8536	226/-	10
90112	6A/10A/13A Combi Socket for all types of Pins	8536	246/-	10
90018	6A 3 Pin Socket	8536	135/-	10
	MOTOR STARTER SWITCH SINGLE PHASE, 240V ~			
90154	20A Motor Starter Switch	8536	492/-	10
90157	25A Motor Starter Switch	8536	492/-	10
	FAN REGULATORS & DIMMERS, 240V ~, 50Hz			
90166	Fan Step Regulator Tiny EME 100W	8414	392/-	10
90172	Fan Step Regulator 100W	8414	531/-	10
91865	High Speed Fan Step Regulator 100W	8414	548/-	10
90175	Mini 450 W Dimmer	8543	344/-	10
90178	Dimmer 650 W (For Incandescent Lamp)	8543	468/-	10
90181	Dimmer 1000 W (For Incandescent Lamp)	8543	676/-	10

* 16A,20A,25A Switch not suggested for geyser load. Instead Motor Starter must be used.

90217 90220 90229 91859 91856 91862
(Suitable for Amps, KRONE, Systimax Jacks)

90265 90226 90232 CAT 5 90268 CAT 6 90241 90205

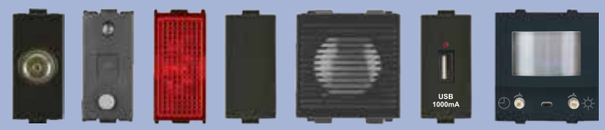

90208 90250 90244 90235 90271 90148 90256

90259 90223 90253

For Outside The Room For Inside The Room Final Look Outside The Room
90637

90289

90202 Final Look Inside The Room

90298

CODE	DESCRIPTION	HSN CODE	MRP	PKD
	SUPPORT MODULE			
90217	Telephone Jack RJ11 Single with shutter	8536	117/-	20
90220	Telephone Jack RJ11 Double W/O shutter	8536	169/-	20
90229	Adaptor only for AT&T / Lucent AMPS Avaya Cat 5	8536	124/-	10
91859	RJ45 computer socket Cat 6	8536	441/-	10
91856	RJ45 computer socket Cat 5e	8536	385/-	10
91862	RJ 45 Receptor	8536	116/-	10
90265	Adaptor for AT&T/ Lucent Cat 6 with shutter	8536	128/-	10
90226	Computer / Modem Jack RJ45 with shutter	8536	220/-	10
90232	Computer / Modem Jack Cat 5 with shutter	8536	972/-	10
90268	Computer Jack Cat 6 for AT&T/ Lucent	8536	1084/-	10
90241	Fuse Unit for 16A or 10A	8536	128/-	20
90205	Cord Outlet with Grip	8536	99/-	20
90208	TV Antena Outlet	8536	117/-	20
90250	Bell Indicator	8536	231/-	10
90244	Neon Indicator (Red)	8531	83/-	10
90235	Blank Plate Single	8538	24/-	20
90271	Buzzer	8531	149/-	10
90148	1000mA, 5VDC ,USB Charger,1M	8536	771/-	10
90256	PIR Sensor (Wall Mounting),12A,240V~,50Hz	8536	2515/-	4
90259	Compact Speaker 3 w. rms	8536	347/-	10
90223	Volume Controller	8536	163/-	10
90253	Down Light / Foot Light (LED - White) with Variable Shutter Regulates Light Output (3 Module White Cool Day Light)	8414	437/-	10
	HOTEL & HOSPITALITY RANGE 240V~ (Unit 5 Nos) DND / MMR			
90637	Indicator marked DO NOT DISTURB Indicator marked MAKE MY ROOM Bell Push Switch (Outside The Room) + Switch marked DO NOT DISTURB Switch marked MAKE MY ROOM (To Operate From Inside The Room)	8536	1010/-	5
	32A DOUBLE POLE MAIN SWITCH OPERATED BY KEY RING TAG 240V~			
90289	32A D.P. Switch Operate by key ring tag PC (With frame & front plate) 2 module (Complete Unit)	8536	533/-	5
	KEY CARD SWITCH, 240V~			
90202	20A 30 seconds time delay electronic key card unit (without frame & plate) 3 module (Supplied without Card)	8536	1516/-	5
	SHAVER SOCKET, 240V~			
90298	Shaver Socket with Transformer 110 / 240V (with mounting frame & front plate) 4 module	8536	1626/-	1

Matrix® Glossy Finish

Front Cover Plates with Base Frame

White - WH

Ivory-IV

COLOUR GLOSSY FINISH	1 MODULE	2 MODULE	3 MODULE	4 MODULE	6 MODULE	8 MODULE HORIZONTAL	8 MODULE VERTICAL	12 MODULE	16 MODULE	18 MODULE
WHITE	60301 WH	60304 WH	60307 WH	60310 WH	60313 WH	60316 WH	60319 WH	60322 WH	60325 WH	60328 WH
IVORY	60301 IV	60304 IV	60307 IV	60310 IV	60313 IV	60316 IV	60319 IV	60322 IV	60325 IV	60328 IV
HSN CODE	8538	8538	8538	8538	8538	8538	8538	8538	8538	8538
M.R.P. Rs./Unit	**73/-**	**75/-**	**91/-**	**105/-**	**151/-**	**188/-**	**188/-**	**250/-**	**280/-**	**314/-**
Std. Pkg.	10	10	10	10	10	10	5	5	5	5

* Do not use " Hard Cleaning Agent" for cleaning purpose.

Matrix® Natural Finish

Front Cover Plates with Base Frame

Rose Wood - RW

American Cherry - AC

COLOUR NATURAL FINISH	1 MODULE	2 MODULE	3 MODULE	4 MODULE	6 MODULE	8 MODULE HORIZONTAL	8 MODULE VERTICAL	12 MODULE	16 MODULE	18 MODULE
ROSE WOOD	60373 RW	60376 RW	60379 RW	60382 RW	60385 RW	60388 RW	60391 RW	60394 RW	60397 RW	60400 RW
AMERICAN CHERRY	60373 AC	60376 AC	60379 AC	60382 AC	60385 AC	60388 AC	60391 AC	60394 AC	60397 AC	60400 AC
HSN CODE	8538	8538	8538	8538	8538	8538	8538	8538	8538	8538
M.R.P. Rs./Unit	**92/-**	**92/-**	**113/-**	**133/-**	**191/-**	**258/-**	**258/-**	**318/-**	**351/-**	**371/-**
Std. Pkg.	10	10	10	10	10	10	5	5	5	5

* Do not use " Hard Cleaning Agent" for cleaning purpose.

Matrix® Metallic Finish

Front Cover Plates with Base Frame

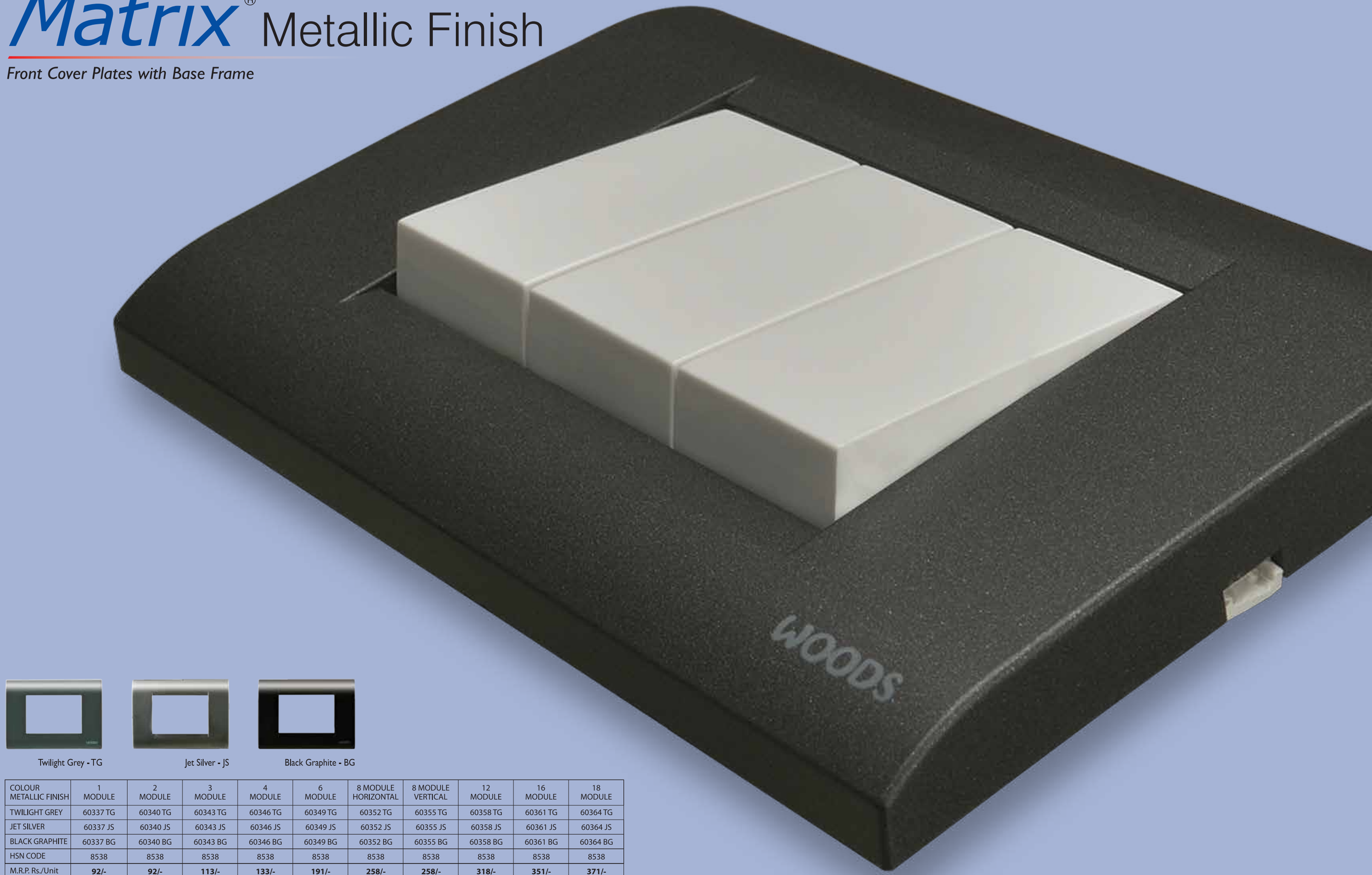

Twilight Grey - TG

Jet Silver - JS

Black Graphite - BG

COLOUR METALLIC FINISH	1 MODULE	2 MODULE	3 MODULE	4 MODULE	6 MODULE	8 MODULE HORIZONTAL	8 MODULE VERTICAL	12 MODULE	16 MODULE	18 MODULE
TWILIGHT GREY	60337 TG	60340 TG	60343 TG	60346 TG	60349 TG	60352 TG	60355 TG	60358 TG	60361 TG	60364 TG
JET SILVER	60337 JS	60340 JS	60343 JS	60346 JS	60349 JS	60352 JS	60355 JS	60358 JS	60361 JS	60364 JS
BLACK GRAPHITE	60337 BG	60340 BG	60343 BG	60346 BG	60349 BG	60352 BG	60355 BG	60358 BG	60361 BG	60364 BG
HSN CODE	8538	8538	8538	8538	8538	8538	8538	8538	8538	8538
M.R.P. Rs./Unit	**92/-**	**92/-**	**113/-**	**133/-**	**191/-**	**258/-**	**258/-**	**318/-**	**351/-**	**371/-**
Std. Pkg.	10	10	10	10	10	10	5	5	5	5

* Do not use " Hard Cleaning Agent" for cleaning purpose.

Matrix® Hairline Finish

Front Cover Plates with Base Frame

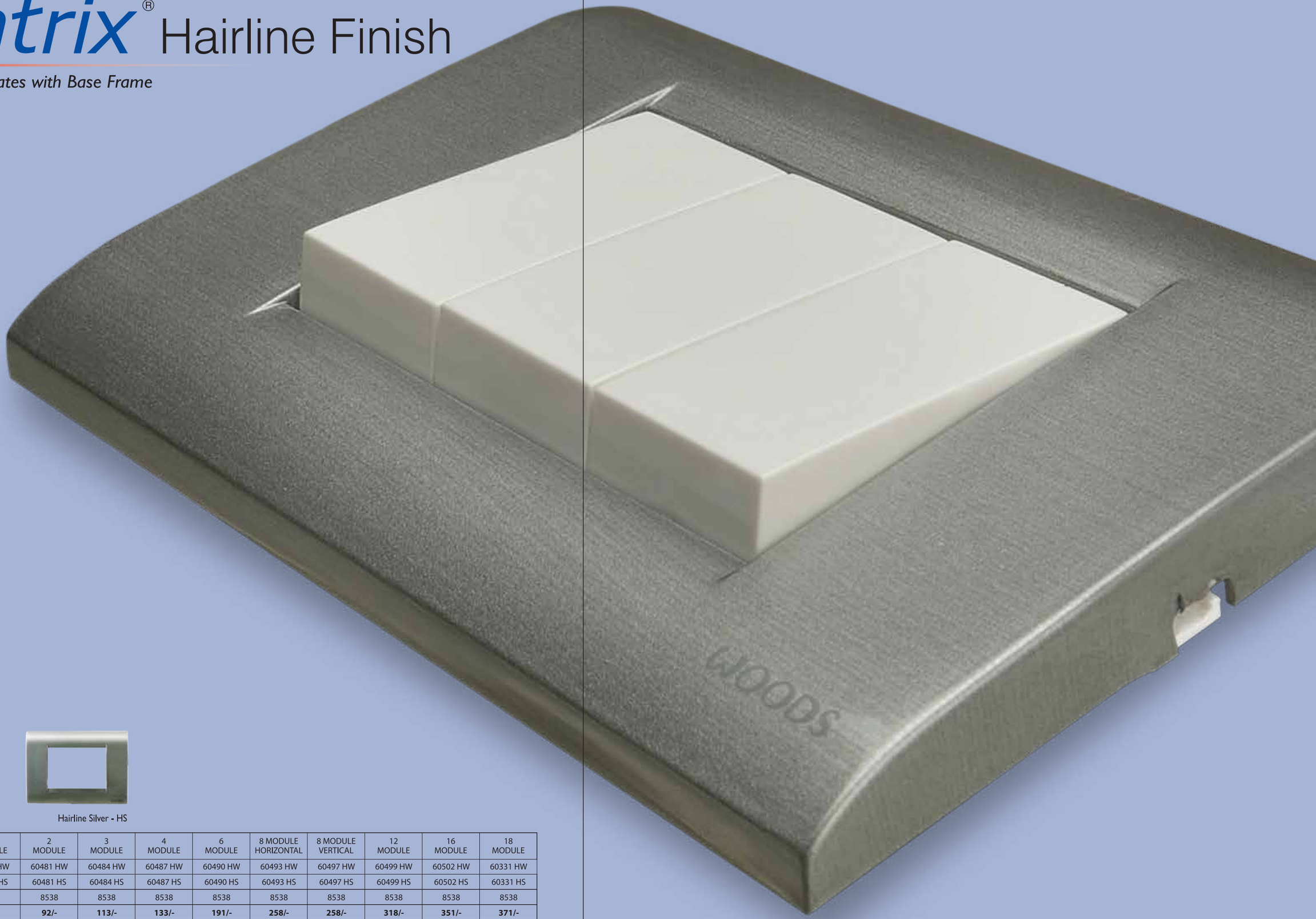

Hairline Brown - HW

Hairline Silver - HS

COLOUR HAIRLINE FINISH	1 MODULE	2 MODULE	3 MODULE	4 MODULE	6 MODULE	8 MODULE HORIZONTAL	8 MODULE VERTICAL	12 MODULE	16 MODULE	18 MODULE
HAIRLINE BROWN	60478 HW	60481 HW	60484 HW	60487 HW	60490 HW	60493 HW	60497 HW	60499 HW	60502 HW	60331 HW
HAIRLINE SILVER	60478 HS	60481 HS	60484 HS	60487 HS	60490 HS	60493 HS	60497 HS	60499 HS	60502 HS	60331 HS
HSN CODE	8538	8538	8538	8538	8538	8538	8538	8538	8538	8538
M.R.P. Rs./Unit	**92/-**	**92/-**	**113/-**	**133/-**	**191/-**	**258/-**	**258/-**	**318/-**	**351/-**	**371/-**
Std. Pkg.	10	10	10	10	10	10	5	5	5	5

* Do not use " Hard Cleaning Agent" for cleaning purpose.

STELLA® White

Front Cover Plates with Base Frame

White

GLOSSY FINISH	1 MODULE	2 MODULE	3 MODULE	4 MODULE	6 MODULE	8 MODULE HORIZONTAL	8 MODULE RECTANGULAR	9 MODULE HORIZONTAL	12 MODULE	16 MODULE	18 MODULE
WHITE	61700 WH	61703 WH	61706 WH	61709 WH	61712 WH	61715 WH	61718 WH	61820 WH	61721 WH	61724 WH	61727 WH
HSN CODE	8538	8538	8538	8538	8538	8538	8538	8538	8538	8538	8538
M.R.P. Rs./Unit	**73/-**	**75**	**91/-**	**105/-**	**151/-**	**188/-**	**188/-**	**251/-**	**250/-**	**280/-**	**314/-**
Std. Pkg.	10	10	10	10	10	10	5	10	5	5	5

* Do not use " Hard Cleaning Agent" for cleaning purpose.

Range Available
From 1 To 18 Module
(Dimensions in mm)

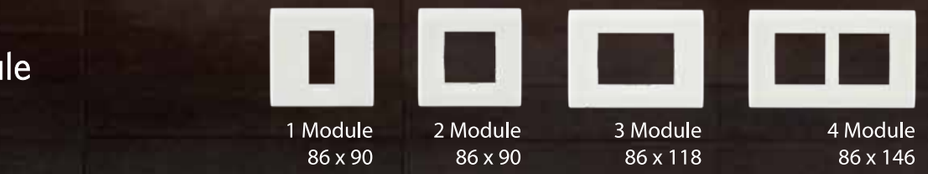

1 Module
86 x 90

2 Module
86 x 90

3 Module
86 x 118

4 Module
86 x 146

6 Module
86 x 220

8 Module Horizontal
86 x 250

9 Module Horizontal
86 x 250

8 Module Rectangular
155 x 146

12 Module
155 x 220

16 Module
155 x 250

18 Module
220 x 220

SWITCH FEATURES

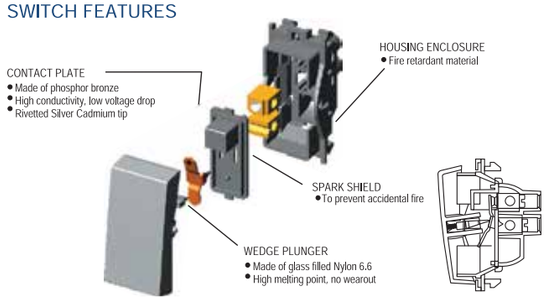

Woods Switches operate with soft sound but solid contact and fastest make & break technology provide effortless operation without any noise

The fascinating finishes of the beautiful Stella front cover plates blend beautifully with any decor to create the ambience you desire.

An array of colourful plates in Matrix series can match any wall decor.

The modular design gives you the convenience to add, remove or replace any device at will, when ever you want.

SOCKET FEATURES

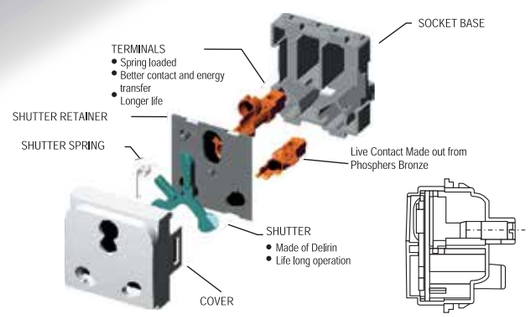

Feel The Luxury

Volume Controller + Compact Speaker
Low Level Chanelized Music for
Small Cabins, Cubicles and Residences

Bell Indicator
Service Call Bell System for Offices,
Hospitals, Hotel and Large Homes

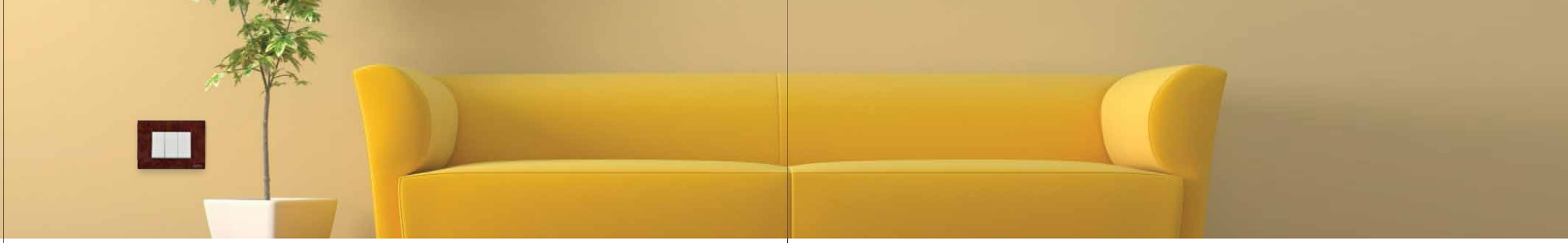

Concealed Galvanised Metal Boxes

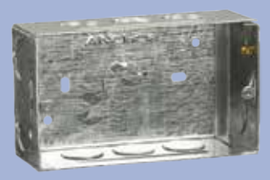

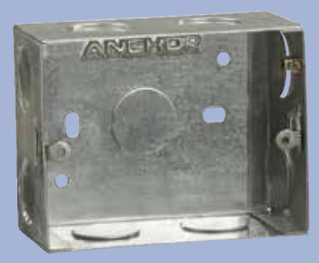

Metal Boxes

- Rust Protected 120 GSM GI BOXES
- Very long service life
- Good quality threads
- Tested as per IS
- Earthing terminal to avoid shock

CONCEALED GI SHEET METAL BOXES (20 Gauge)

Concealed Galvanised mounting boxes (Rust Protected)

Code	Module	Size(mm)	Depth(mm)	HSN Code	MRP ₹/ Unit	Pkd
21780	1 or 2 Module	79 x 75	46	8538	45/-	10
21452	3 Module	79 x 99	46	8538	61/-	10
21791	4 Module	79 x 135	52	8538	75/-	10
21463	6 Module	79 x 207	52	8538	101/-	10
30453	8 or 9 Module Horizontal	79 x 230	52	8538	131/-	5
21474	8 Module Rectangular	132 x 135	56	8538	131/-	5
21485	12 Module	132 x 207	56	8538	161/-	5
21736	16 Module	142 x 230	56	8538	173/-	5
21758	18 Module	207 x 207	60	8538	190/-	5

CONCEALED GI SHEET METAL BOXES (18 Gauge)

Concealed Galvanised mounting boxes (Rust Protected)

35640	1 or 2 Module	79 x 75	46	8538	55/-	10
35650	3 Module	79 x 99	46	8538	77/-	10
35661	4 Module	79 x 135	52	8538	94/-	10
35672	6 Module	79 x 207	52	8538	125/-	10
35683	8 or 9 Module Horizontal	79 x 230	52	8538	163/-	5
35394	8 Module Rectangular	132 x 135	56	8538	163/-	5
35708	12 Module	132 x 207	56	8538	201/-	5
35719	16 Module	142 x 230	56	8538	215/-	5
35720	18 Module	207 x 207	60	8538	237/-	5

CONCEALED GI SHEET METAL BOXES (16 Gauge)

Concealed Galvanised mounting boxes

35785	1 or 2 Module	79 x 75	46	8538	81/-	10
35796	3 Module	79 x 99	46	8538	96/-	10
35800	4 Module	79 x 135	52	8538	124/-	10
35810	6 Module	79 x 207	52	8538	166/-	10
35832	8 or 9 Module Horizontal	79 x 230	52	8538	185/-	5
35821	8 Module Rectangular	132 x 135	56	8538	185/-	5
35843	12 Module	132 x 207	56	8538	236-	5
35854	16 Module	142 x 230	56	8538	272/-	5
35865	18 Module	207 x 207	60	8538	326/-	5

NEW

Concealed Stainless Steel Boxes

Concealed Mounting Boxes

Plastic Boxes

- High quality boxes made with High impact plastics
- Metal thread inserts

STAINLESS STEEL METAL BOXES

Code	Module	Size(mm)	Depth(mm)	HSN Code	MRP ₹/ Unit	Pkd
36001	1 or 2 Module	79 x 75	46	8538	247/-	10
36002	3 Module	79 x 99	46	8538	285/-	10
36003	4 Module	79 x 135	52	8538	366/-	10
36004	6 Module	79 x 207	52	8538	489/-	10
36006	8 or 9 Module Horizontal	79 x 230	52	8538	576/-	5
36005	8 Module Rectangular	132 x 135	56	8538	576/-	5
36007	12 Module	132 x 207	56	8538	712/-	5
36008	16 Module	142 x 230	56	8538	804/-	5
36009	18 Module	207 x 207	60	8538	972/-	5

SURFACE PLASTIC BOXES

21281	1 or 2 Module	85 x 85	40	8538	45/-	10
20449	3 Module	85 x 115	48	8538	57/-	10
21292	4 Module	85 x 145	48	8538	62/-	10
30511	6 Module	85 x 219	40	8538	81/-	10
30704	8 or 9 Module Horizontal	85 x 248	40	8538	114/-	5
20450	8 Module Rectangular	152 x 145	40	8538	114/-	5
20347	12 Module	153 x 214	40	8538	143/-	5
34567	16 Module*	153 x 259	40	8538	153/-	5

*Not suitable for Woods - (Matrix, Stella Plate), Vision & Roma Plates

CONCEALED PLASTIC BOXES

21 237	1 or 2 Module	78 x 78	45	8538	35/-	10
21 306	3 Module	75 x 103	52	8538	42/-	10
21 248	4 Module	76 x 136	46	8538	55/-	10
21 259	6 Module	76 x 205	50	8538	81/-	10
30 475	8 or 9 Module Horizontal	78 x 229	50	8538	105/-	5
21 260	8 Module Rectangular	135 x 133	51	8538	105/-	5
21 270	12 Module	135 x 206	51	8538	131/-	5
21 408	18 Module	204 x 207	51	8538	166/-	5

ANCHOR
by Panasonic

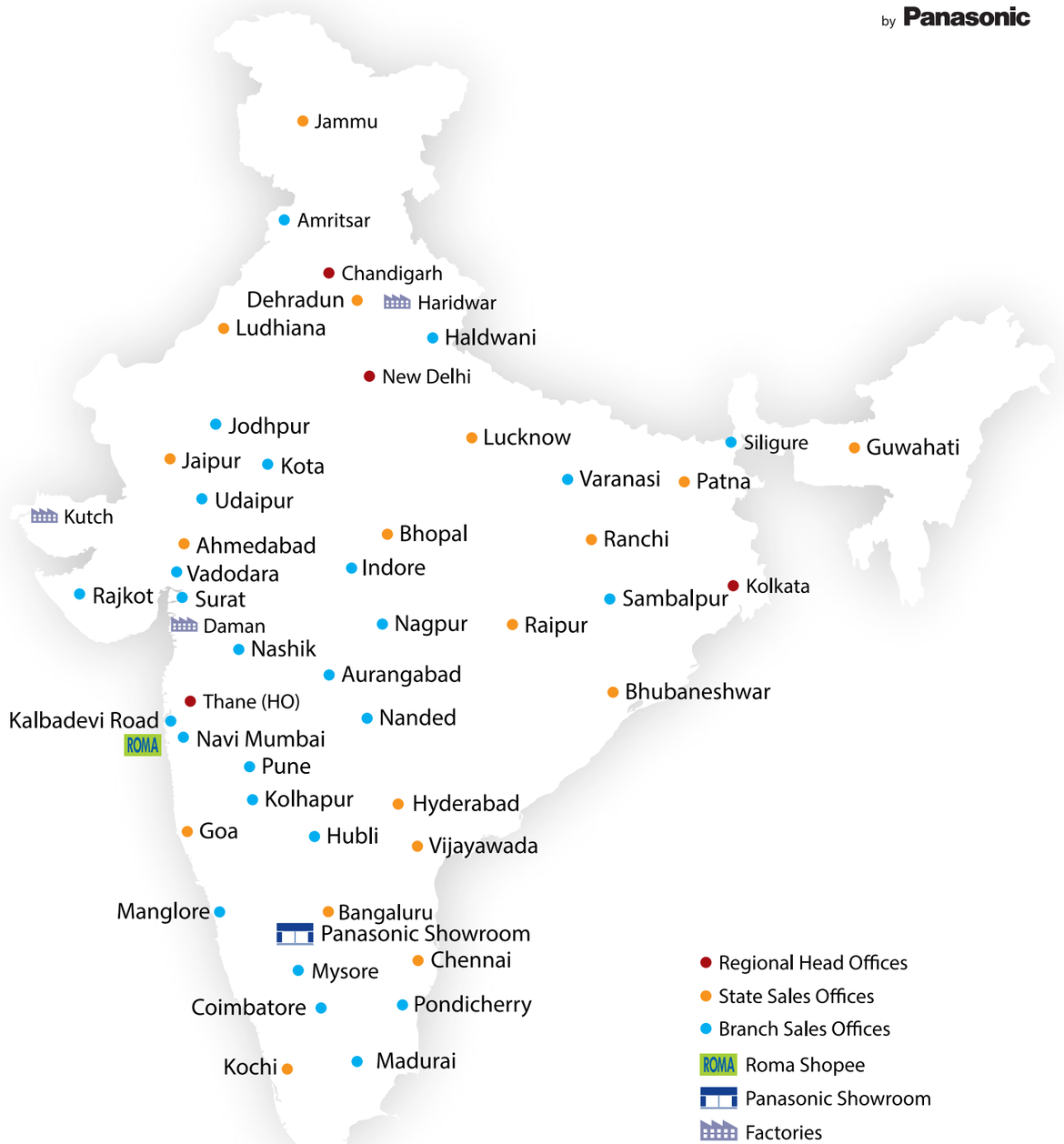

HEAD / REGIONAL OFFICES

WEST (H.O.)

Anchor Electricals Pvt. Ltd.
3rd Floor, B Wing, I-Think Techno Campus,
Pokhran Road No. 2, Thane (W)
Thane, Maharashtra - 400607 | Tel: (9122) 30418888

EAST

Anchor Electricals Pvt. Ltd.
4th Floor, Block " C ", Apeejay House
15, Park Street, Kolkata, West Bengal - 700 016
Tel: 033-32219196 / 082-32019196

NORTH-1

Anchor Electricals Pvt. Ltd.
SCO-40, 1st Floor, NAC Manimajra, Chandigarh-160101,
Tel: 0172-3255715

NORTH-2

Anchor Electricals Pvt. Ltd.
6th Floor, TDI Centre, Jasola District, New Delhi - 110025
Tel: 011-46006400

SOUTH

Anchor Electricals Pvt. Ltd.
No. 8-12, III Floor, Prestige Nebula-II, Infantry Road,
Bangalore, Karnataka - 560001 | Tel: 080-30284400-40

STATE / SALES OFFICES

NORTH-1

JAMMU
Anchor Electricals Pvt. Ltd.
85/1-1st Floor, Trikuta Nagar,
Jammu - 180012
Tel: 0191-2470735 / 2470736

PUNJAB
B-20/2813/13-A,
3rd Floor, Ranjit Tower,
Pakhowal Road, Gurdev Nagar,
Ludhiana 141001 (Punjab)
Tel: 0161-4630796 / 013-32235077 / 78

AMRITSAR
Anchor Electricals Pvt. Ltd.
45, Deep Complex, Court Road,
Amritsar, Punjab - 143001
Tel: 0183-3292567

UTTARAKHAND
Anchor Electricals Pvt. Ltd.
Khasra No : 332-333-335 & 339,
1st Floor, Main Saharanpur Road,
Niranjanpur, Opp : Institute of
Hotel Management, HCL Compound,
Dehradun - 248 001
Tel: 0135-3241686

HALDWANI
Anchor Electricals Pvt. Ltd.
Shop No. U-28, Upper Ground Floor
Phase - 1, Durga City Centre
Haldwani - 263 141

NORTH-2

JAIPUR
Anchor Electricals Pvt. Ltd.
224-225, 2nd Floor, Ganpati Plaza
M.I. Road Jaipur,
Rajasthan - 302001
Tel: 0141-3007666 / 2331369

UDAIPUR
Anchor Electricals Pvt. Ltd.
4C/201, Riddhi Siddhi
Complex, Madhuvan, Udaipur,
Rajasthan - 313001
Tel: 0294-2422412

JODHPUR
Anchor Electricals Pvt. Ltd.
27/20, Light Industrial Area,
Near ITI Circle Jodhpur 342 003
Tel: 029-12651000

KOTA
Anchor Electricals Pvt. Ltd.
Office No. 6, Plot No. 621, 1st Floor,
Mukesh Plaza, Dadabari, Kota,
Rajasthan - 324009
Tel: 0744-2500368

UTTAR PRADESH
Anchor Electricals Pvt. Ltd.
201, Govinda Building, 1-A,
Shahnaaz Road, Hazratgunj,
Lucknow, Uttar Pradesh - 226001
Tel: 0522-3920999

VARANASI
Anchor Electricals Pvt. Ltd.
P. N. 204, H No. C-27/274 A-3,
S-1, 2nd Floor, Dr. Jai Singh
Building, Maldahiya, Varanasi,
Uttar Pradesh - 221001
Tel: 093-07142565

EAST-1

WEST BENGAL
1st Floor, Hanshara House,
Beside City Mall (Bazar Kolkata),
Sevoke Road, Siliguri - 734001

ASSAM
Anchor Electricals Pvt. Ltd.
Duhang Arcade 2A, 2nd Floor,
G. S Road, Tarun Nagar,
Opp. Dona Plannet, Guwahati, Assam -781005
Tel: 0361-2450577

EAST-2

BIHAR
Anchor Electricals Pvt. Ltd,
F-1, 1st Floor, Gitanjali Palace, Jamal
Road, Patna, Bihar - 800001
Tel: 0612-3297075

ODISHA
Anchor Electricals Pvt. Ltd,
2nd Floor,Creative Plaza, Rasulgarh
Square, Mouza-Bomikhal
Bhubaneswar, Odisha - 751010
Tel: 0674-3240109

SAMBALPUR
Anchor Electricals Pvt. Ltd.
Quality Mansion, 1st Floor, Nayapada,
Sambalpur, Odisha - 768001
Tel: 093-37780450

RANCHI
Anchor Electricals Pvt. Ltd.
509, 5th Floor, R. R Tower, Opp.
Akashwani,(Near New Market Chawk)
Ratu Road, Ranchi, Jharkhand - 834005
Tel: 0651-3241617

WEST

GOA
Anchor Electricals Pvt. Ltd,
403, Gera Imperium II, 4th Floor,
Patto Panjim, Goa - 403001
Tel: 0832-3294189 / 3193131

PUNE
Anchor Electricals Pvt. Ltd,
Fifth Avenue,office No,E4-A,4th Floor,
Dhole Patil Road, Pune - 411001
Tel: 020-66207260

NANDED
Anchor Electricals Pvt. Ltd,
101 Millennium Tower, Bhawsar
Chowk, Malegaon Road,
Taroda Naka, Nanded - 431605
Tel: 02462-266855

NAGPUR
Anchor Electricals Pvt. Ltd.
Tapashiya, 1st Floor, Near Rahale
Hospital, Adamsha Chawk,
Nagpur - 440008
Tel: 09370430999

AURANGABAD
Anchor Electricals Pvt. Ltd.
Plot No. 8, Raj Tower, 2nd Floor,
Near Angethi Hotel, Jalna Road,
Aurangabad - 431001
Tel: 0240-6500200

KOLHAPUR
Anchor Electricals Pvt. Ltd.
1st Floor, Office No. 4, Namdev Nest
Above Axis Bank, Opp. Kamla College
Rajaramputi, Takala, C. S. No. 1160B
Kolhapur-416001
Tel: 0231-6050945

NASHIK
Anchor Electricals Pvt. Ltd.
Archit Icon,1st Floor, Patil Lane Road,
Nashik - 422005.

KALBADEVI ROAD
Anchor Electricals Pvt. Ltd.
C-369/485, Takwadi, Behind
Bank of India, 485, Kalbadevi Road,
Mumbai, Maharashtra - 400002
Tel: 022-39567073

NAVI MUMBAI
Anchor Electricals Pvt. Ltd.
Arenja Corner, 3rd Floor, 301,
Sector 17, Vashi, Navi Mumbai,
Maharashtra - 400703
Tel: 022-65551316

CHHATTISGARH
Anchor Electricals Pvt. Ltd.
316-317 (A to E), Ravi Bhavan,
3rd Floor, Jaistambh Chowk,
Raipur - 492001
Tel: 0771-3291701

GUJRAT
Anchor Electricals Pvt. Ltd.
405, 3rd Eye one complex, Opp.
Havmor Restaurant, Panchvati, C.G.
Road, Ahmedabad, Gujarat - 380006
Tel: 079-30063870 / 26460172

SURAT
Anchor Electricals Pvt. Ltd.
403, 4th Floor, Union Trade Centre,
Above Passport Office, Udhana
Darwaja, Ring Road, Surat,
Gujarat - 395002
Tel: 0261-3002008 / 0261-3002009

VADODARA
Anchor Electricals Pvt. Ltd.
306, Atlantis, Near Croma, Genda
Circle Road, Vadodara,
Gujarat - 390007
Tel: 0265-6541992

RAJKOT
Anchor Electricals Pvt. Ltd,
Office No, 502, 5th Floor, King's Plaza,
Astrone Chowk, Sardar Nagar,
Main Road, Rajkot,
Gujarat - 360001
Tel: 0281-3010400

INDORE
Anchor Electricals Pvt. Ltd.
318, 3rd Floor, D.M. Tower, 21/1
Race Course Road, Indore.
Madhya Pradesh - 452003.
Tel: 0731-3952501 / 05

BHOPAL
Anchor Electricals Pvt. Ltd.
201, Manya Arcade, 2nd Floor,
Plot No. 30, MP Nagar, Zone II,
Bhopal, Madhya Pradesh - 462011
Tel: 075-53061815 / 816

SOUTH

TELANGANA
Anchor Electricals Pvt. Ltd.
G2 1-8 384/385, Gowra Grand,
S. P. Road, Begumpet,
Secunderabad.
Andhra Pradesh - 500003
Tel: 040-30482989 / 2999

BANGALORE
Anchor Electricals Pvt. Ltd.
Prestige Nebula - II, 3rd Floor
Block 2nd, Infernity Road, Cubbon Rd
Bengaluru - 560001
Tel: 080-30284400 / 01

MANGALORE
Anchor Electricals Pvt. Ltd.
225, 1st Floor, Ideal Tower
Opp Saravu Ganpathi Temple
Hampanakatta,
MANGALORE - 575 001

MYSORE
Anchor Electricals Pvt. Ltd.
Nakshatra, No. 858/859,
CS 20 K, R, Mohalla, Narayana
Shastry Road, Mysore,
Karnataka - 570024

HUBLI
Anchor Electricals Pvt. Ltd,
A/122-146, 2nd Floor, Mahalaxmi
Mansion, Above Axis Bank,
New Cotton Market
Despande Nagar, Hubli - 580029
Tel: 0836-3296694

ANDHRA PRADESH
Anchor Electricals Pvt. Ltd.
Door No. 39/10/5, V,N.R.Tower,
2nd Floor,Labbipet, Dist. Krishna,
Vijaywada - 520010
Tel: 0866-3056789

KERALA
Anchor Electricals Pvt. Ltd,
K. P. Varkey & Madathiparambi
Complex, 1st Floor, 351/1085D,
Palarivattom, Cochin - 683525
Tel: 0484-3951000 / 01

TAMILNADU
Anchor Electricals Pvt. Ltd.
Level 3, Ispahani Centre, 123-124,
Nungambakkam High Road,
Chennai, Tamilnadu - 600034
Tel: 044-30261700 / 01

COIMBATORE
Anchor Electricals Pvt. Ltd.
Balavasantha Complex, No,1
Bharthi Park, Cross Road 2,
NSR Road, Saibaba Colony
Coimbatore, Tamilnadu - 641 011

MADURAI
Anchor Electricals Pvt. Ltd.
Wise House, Door No,109
Vakil New Street, Madurai,
Tamilnadu - 625001
Tel: 0452-3720898 / 99

PONDICHERRY
Anchor Electricals Pvt. Ltd,
201, 1st Floor, Mission Street,
Pondicherry, Tamilnadu - 605001
Tel: 0413-3190071 / 3190081

Notes